Alside BECAUSE LIFE IS FOR LIVING®

3773 STATE ROAD, CUYAHOGA FALLS, OH 44223

Digitally signed by Lyndon F Schmidt
Date: 2023.10.09 15:58:01 -04'00'

L. F. SCHMIDT LICENSE No. 43409 STATE OF FLORIDA PROFESSIONAL ENGINEER

"ODYSSEY PLUS"

D4 & D5 Dutch Lap / D4 & D5 Clapboard

Vinyl Siding

This item has been digitally signed and sealed by **L. F. Schmidt, P.E.** on the date adjacent to the seal.

Printed copies of this document are not considered signed and sealed and the signature must be verified on any electronic copies.

THIS PRODUCT APPROVAL IS VALID ONLY FOR THE STATE OF FLORIDA

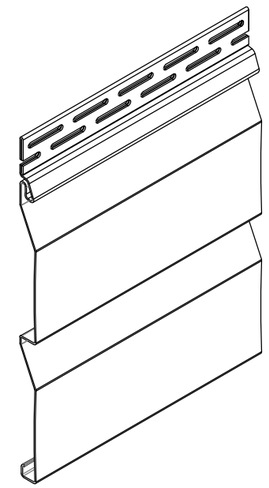

D4 Dutch Lap

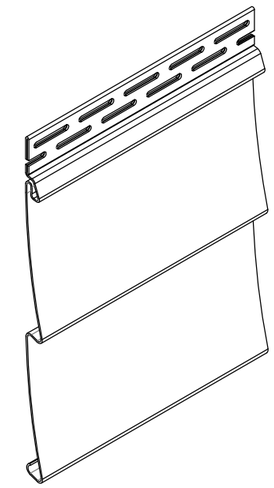

D4 Clapboard

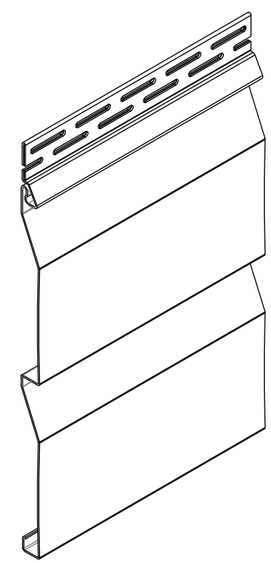

D5 Dutch Lap

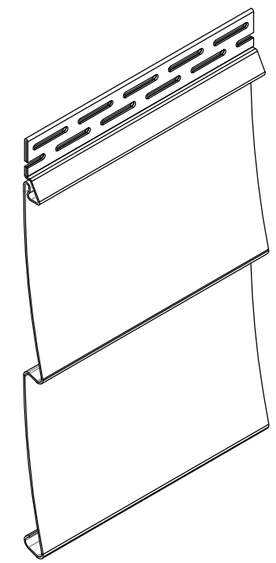

D5 Clapboard

GENERAL NOTES

1. This product has been evaluated and is in compliance with the 8th Edition (2023) Florida Building Code (FBC) excluding the "High Velocity Hurricane Zone" (HVHZ).
2. When used in areas requiring wind borne debris, this product must be installed over an impact resistant substrate. Sheathing shall comply with FBC Section 2304.6.
3. Site conditions not covered by this drawing are subject to further engineering analysis.
4. Vinyl siding shall be labeled as conforming to the requirements of ASTM D 3679 and installed in accordance with this approval, ASTM D 4756 and the manufacturer's installation instructions.
5. Wood wall construction, by others, must be designed properly to receive loads from the siding. In addition, exterior walls with vinyl siding must conform to FBC Section 1405.14, including the water-resistive requirements as specified in FBC Section 1403.
6. Allowable negative design wind pressures (psf) have been calculated according to the provisions of ASTM D 3679-17 Annex A1.

TABLE OF CONTENTS

SHEET#	DESCRIPTION
1	Typical elevation, design pressure & general notes
2	Siding details (D4 Dutch Lap)
3	Siding details (D4 Clapboard)
4	Siding details (D5 Dutch Lap)
5	Siding details (D5 Clapboard)

NEGATIVE DESIGN PRESSURE
-60.0 PSF

Documents Prepared By:
Lyndon F. Schmidt
P.E. No. 43409
RW BUILDING CONSULTANTS, INC.
P.O. Box 230, Valrico, FL 33595
Phone No.: 813.659.9197
FBPE Registry License No. 9813

PRODUCT: VINYL SIDING

PART OR ASSEMBLY: TYPICAL ELEVATION DESIGN PRESSURE & GENERAL NOTES

NO.	DATE	REVISIONS	BY
4	10/9/23	UPDATE TO 8TH ED. (2023) FBC	LFS
3	9/22/20	UPDATE TO 7TH ED. (2020) FBC & REVISE DESIGN PRESSURES	LFS
2	10/03/17	UPDATE TO 6TH ED. (2017) FBC	LFS
1	2/12/15	UPDATE TO 5TH ED. (2014) FBC	LFS

DATE: 03/19/12
SCALE: N.T.S.
DWG. BY: JK
CHK. BY: LFS
DRAWING NO.: FL-15275.1
SHEET 1 OF 5

© 2012 R.W. Building Consultants Inc.

Z:\2023 FBC Drawings\Alside - Siding Division\FL-15275 R4\FL-15275.1-7.dwg

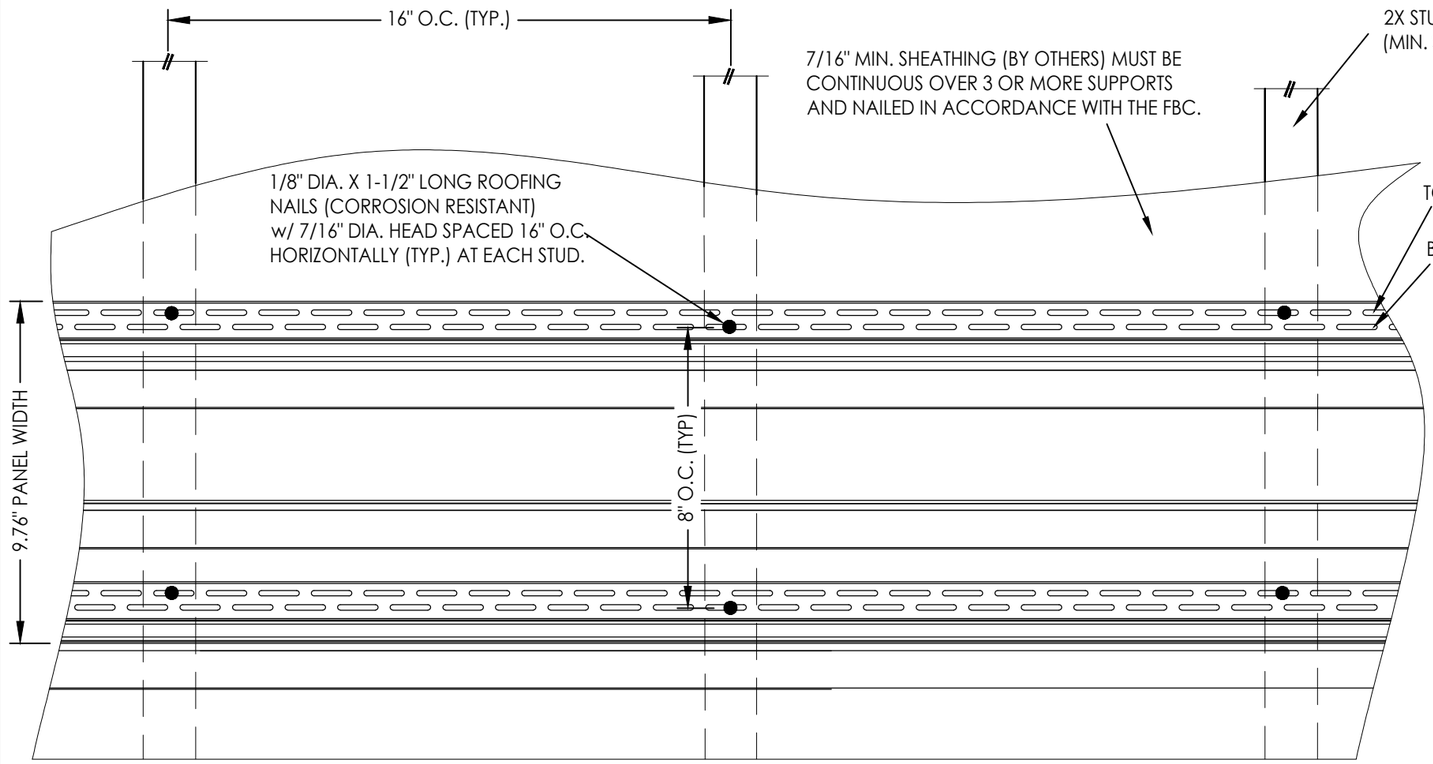

HORIZONTAL SIDING INSTALLATION

2x stud construction w/ sheathing
(Shown w/ alternating nailing pattern between top and bottom rows)

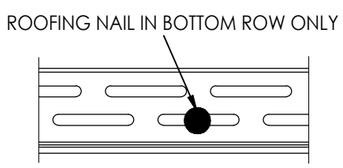

OPTIONAL NAILING INSTALLATION

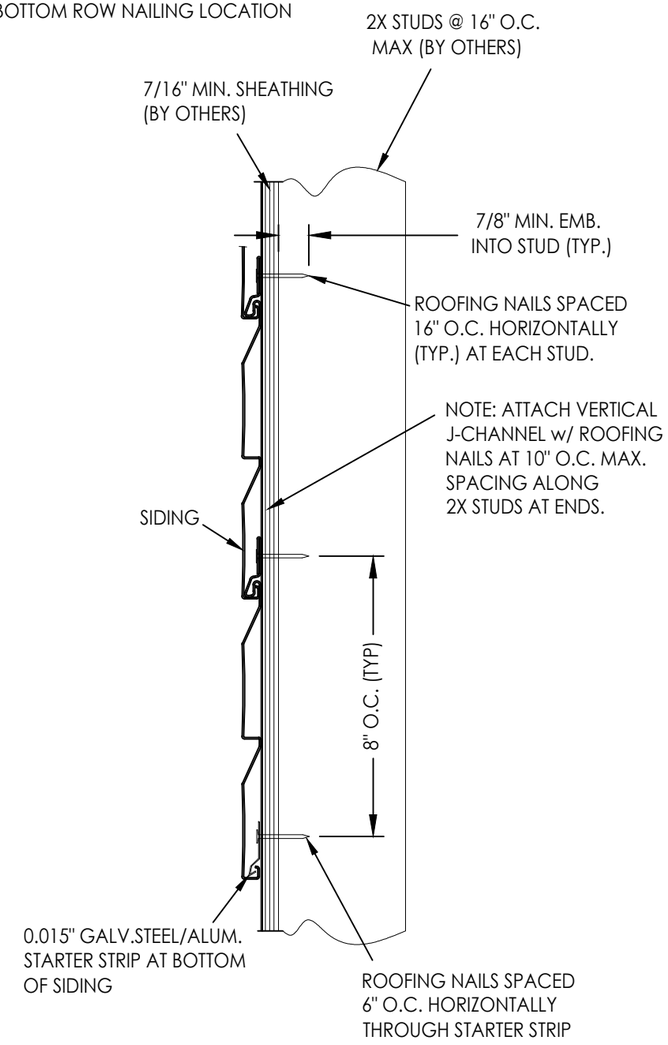

VERTICAL CROSS SECTION

2x stud construction w/ sheathing

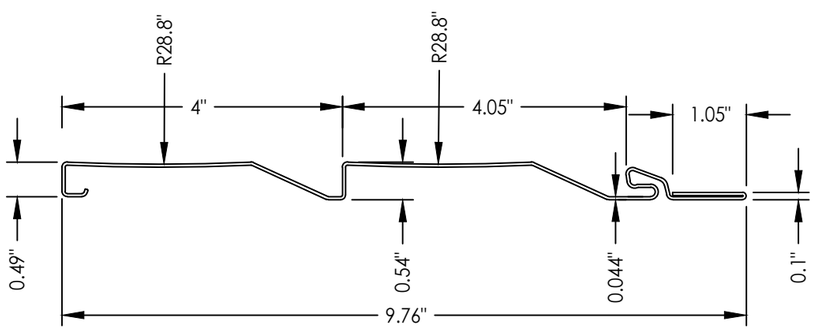

"ODYSSEY" D4 DUTCH LAP

w/ wide nail hem

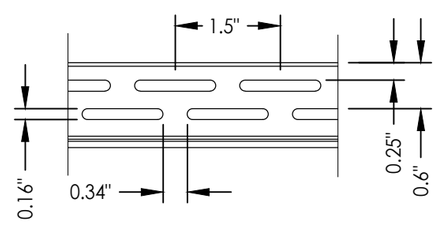

SIDING SLOT DETAILS

Documents Prepared By:
Lyndon F. Schmidt
P.E. No. 43409
RW BUILDING CONSULTANTS, INC.
P.O. Box 230, Valrico, FL 33595
Phone No.: 813.659.9197
FBPE Registry License No. 9813

PRODUCT: VINYL SIDING

PART OR ASSEMBLY: SIDING DETAILS (D4 DUTCH LAP)

REVISIONS

NO.	DATE		BY
4	10/9/23	UPDATE TO 8TH ED. (2023) FBC	LFS
3	9/22/20	UPDATE TO 7TH ED. (2020) FBC & REVISE DESIGN PRESSURES	LFS
2	10/03/17	UPDATE TO 6TH ED. (2017) FBC	LFS
1	2/12/15	UPDATE TO 5TH ED. (2014) FBC	LFS

DATE: 3/19/12
SCALE: N.T.S.
DWG. BY: JK
CHK. BY: LFS
DRAWING NO.: FL-15275.1
SHEET 2 OF 5

Z:\2023 FBC Drawings\Alside - Siding Division\FL-15275 R4\FL-15275.1-7.dwg

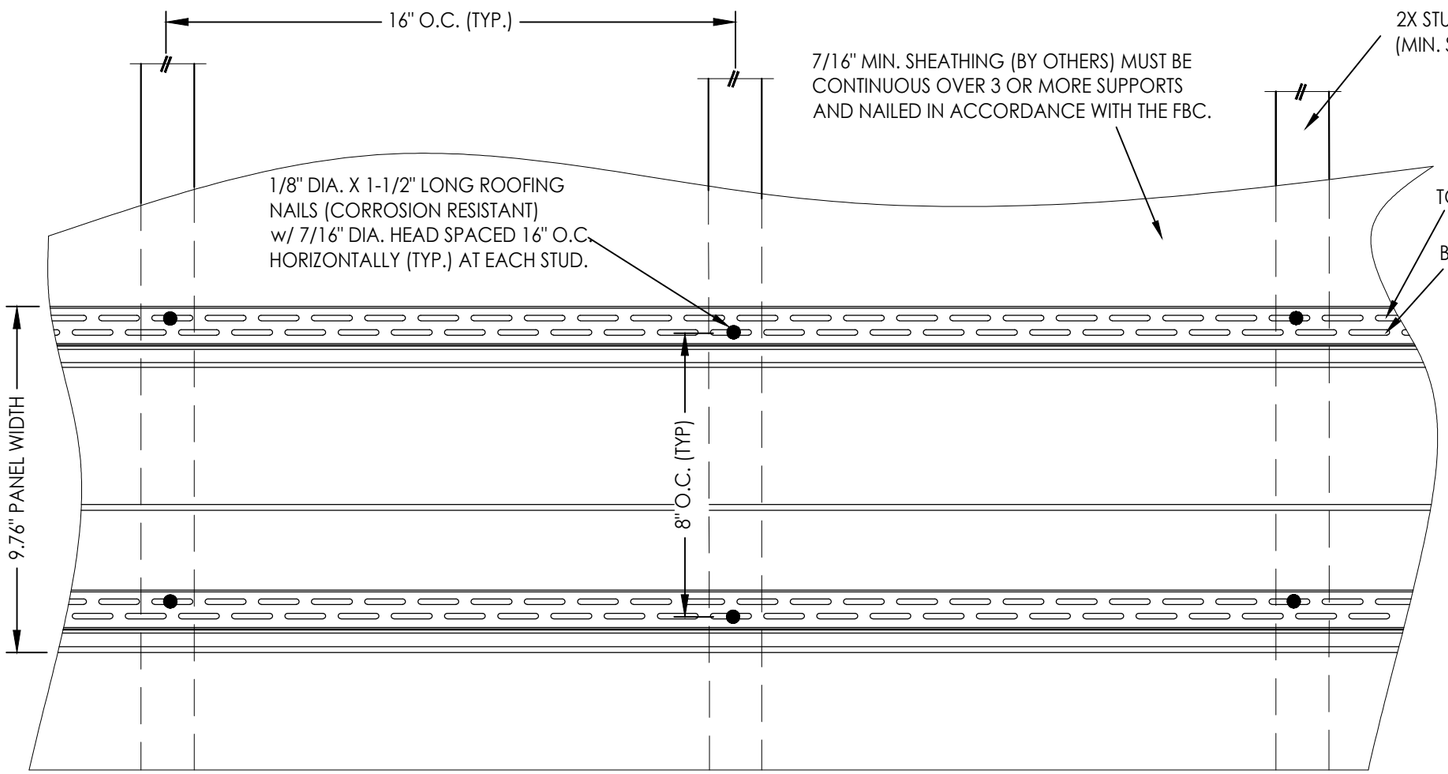

HORIZONTAL SIDING INSTALLATION

2x stud construction w/ sheathing
(Shown w/ alternating nailing pattern between top and bottom rows)

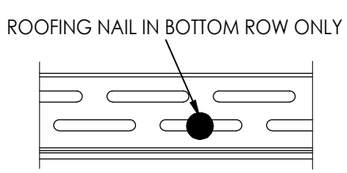

OPTIONAL NAILING INSTALLATION

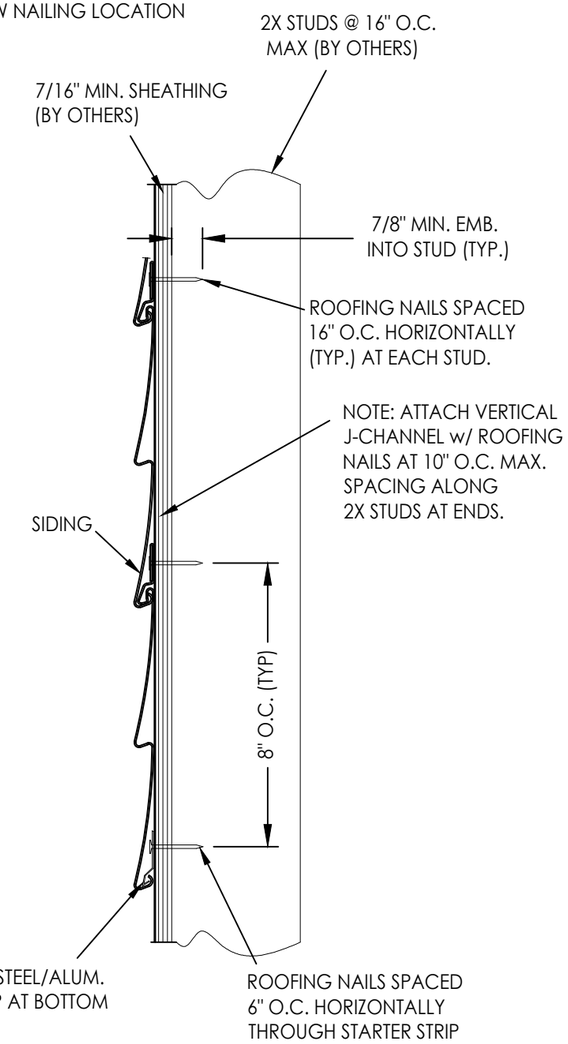

VERTICAL CROSS SECTION

2x stud construction w/ sheathing

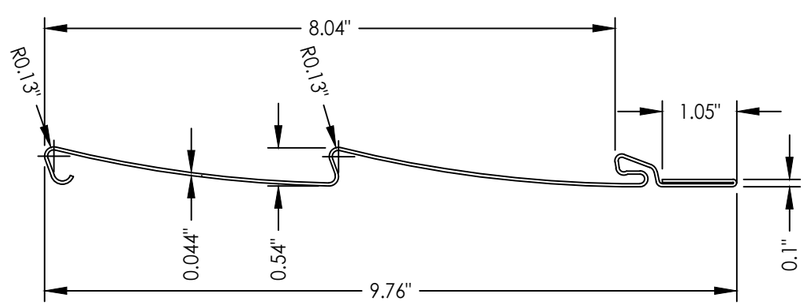

"ODYSSEY" D4 CLAPBOARD

w/ wide nail hem

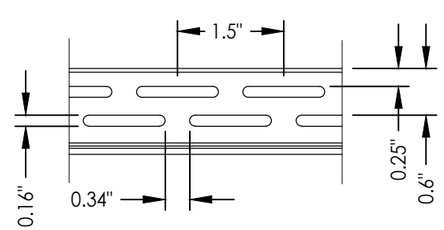

SIDING SLOT DETAILS

Documents Prepared By:
Lyndon F. Schmidt
P.E. No. 43409
RW BUILDING CONSULTANTS, INC.
P.O. Box 230, Valrico, FL 33595
Phone No.: 813.659.9197
FBPE Registry License No. 9813

PRODUCT: VINYL SIDING

PART OR ASSEMBLY: SIDING DETAILS (D4 CLAPBOARD)

REVISIONS

NO.	DATE		BY
4	10/9/23	UPDATE TO 8TH ED. (2023) FBC	LFS
3	9/22/20	UPDATE TO 7TH ED. (2020) FBC	LFS
2	10/03/17	UPDATE TO 6TH ED. (2017) FBC & REVISE DESIGN PRESSURES	LFS
1	2/12/15	UPDATE TO 5TH ED. (2014) FBC	LFS

DATE: 3/19/12
SCALE: N.T.S.
DWG. BY: JK
CHK. BY: LFS
DRAWING NO.: FL-15275.1
SHEET 3 OF 5

Z:\2023 FBC Drawings\Alside - Siding Division\FL-15275 R4\FL-15275.1-7.dwg

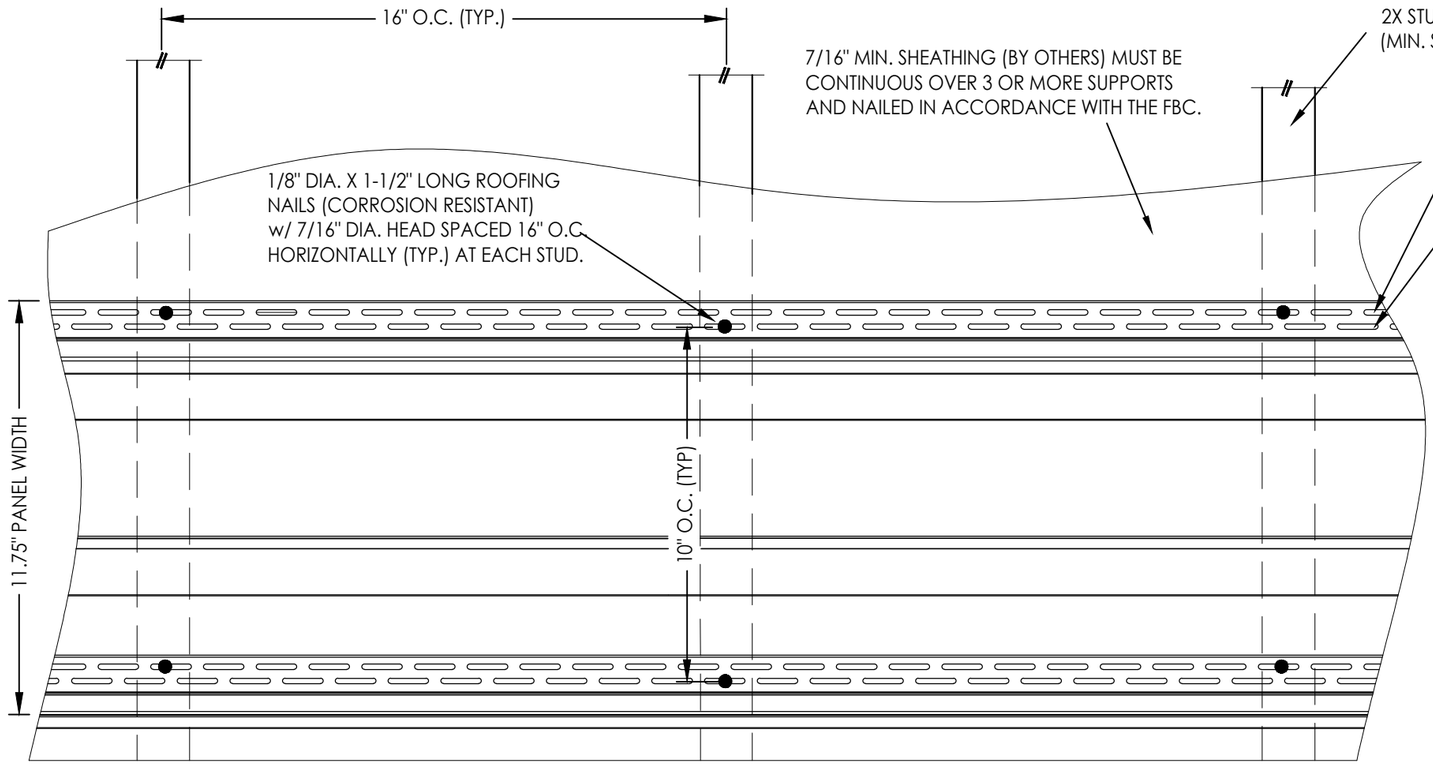

HORIZONTAL SIDING INSTALLATION

2x stud construction w/ sheathing
(Shown w/ alternating nailing pattern between top and bottom rows)

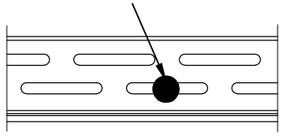

OPTIONAL NAILING INSTALLATION

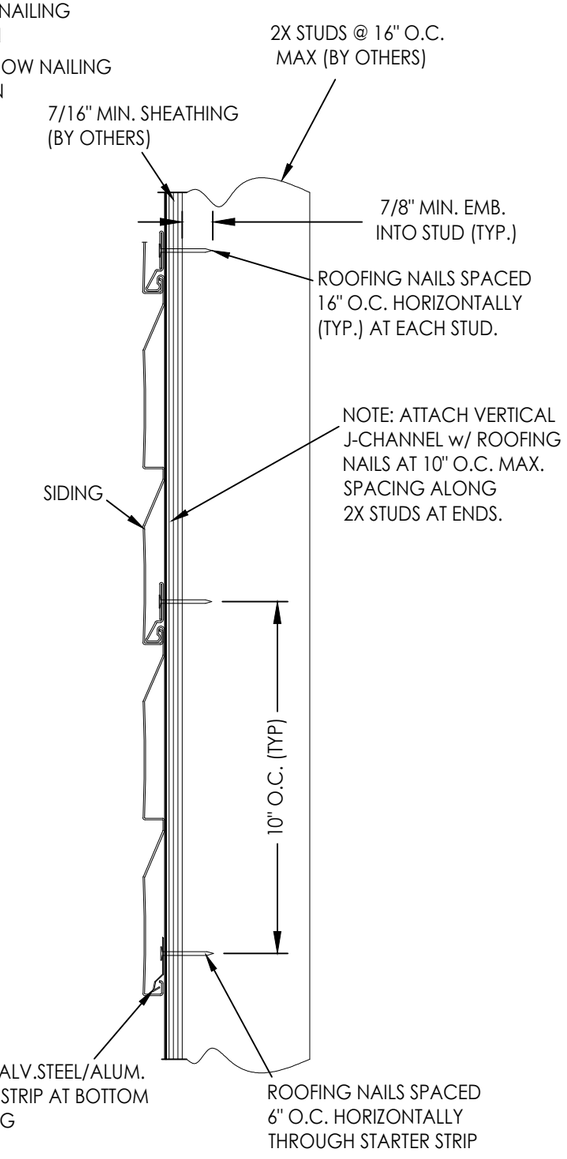

VERTICAL CROSS SECTION

2x stud construction w/ sheathing

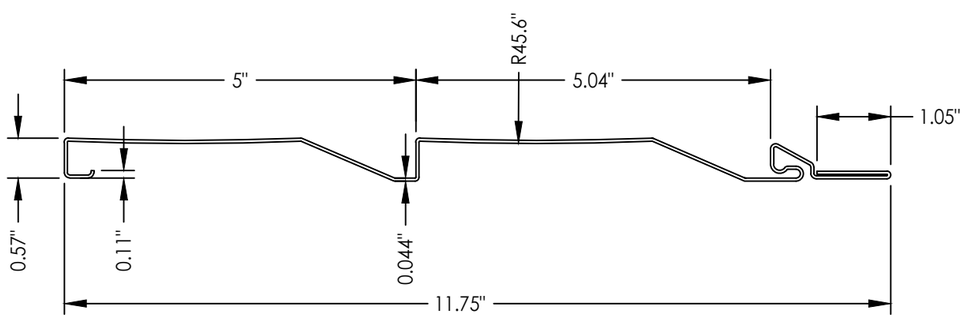

"ODYSSEY" D5 DUTCH LAP

w/ wide nail hem

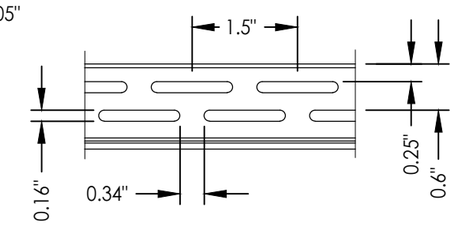

SIDING SLOT DETAILS

Documents Prepared By:
Lyndon F. Schmidt
P.E. No. 43409
RW BUILDING CONSULTANTS, INC.
P.O. Box 230, Valrico, FL 33595
Phone No.: 813.659.9197
FBPE Registry License No. 9813

PRODUCT: VINYL SIDING

PART OR ASSEMBLY: SIDING DETAILS (D5 DUTCH LAP)

NO.	DATE	REVISIONS	BY
4	10/9/23	UPDATE TO 8TH ED. (2023) FBC	LFS
3	9/22/20	UPDATE TO 7TH ED. (2020) FBC & REVISE DESIGN PRESSURES	LFS
2	10/03/17	UPDATE TO 6TH ED. (2017) FBC	LFS
1	2/12/15	UPDATE TO 5TH ED. (2014) FBC	LFS

DATE: 3/19/12
SCALE: N.T.S.
DWG. BY: JK
CHK. BY: LFS
DRAWING NO.: FL-15275.1
SHEET 4 OF 5

Z:\2023 FBC Drawings\Alside - Siding Division\FL-15275 R4\FL-15275.1-7.dwg

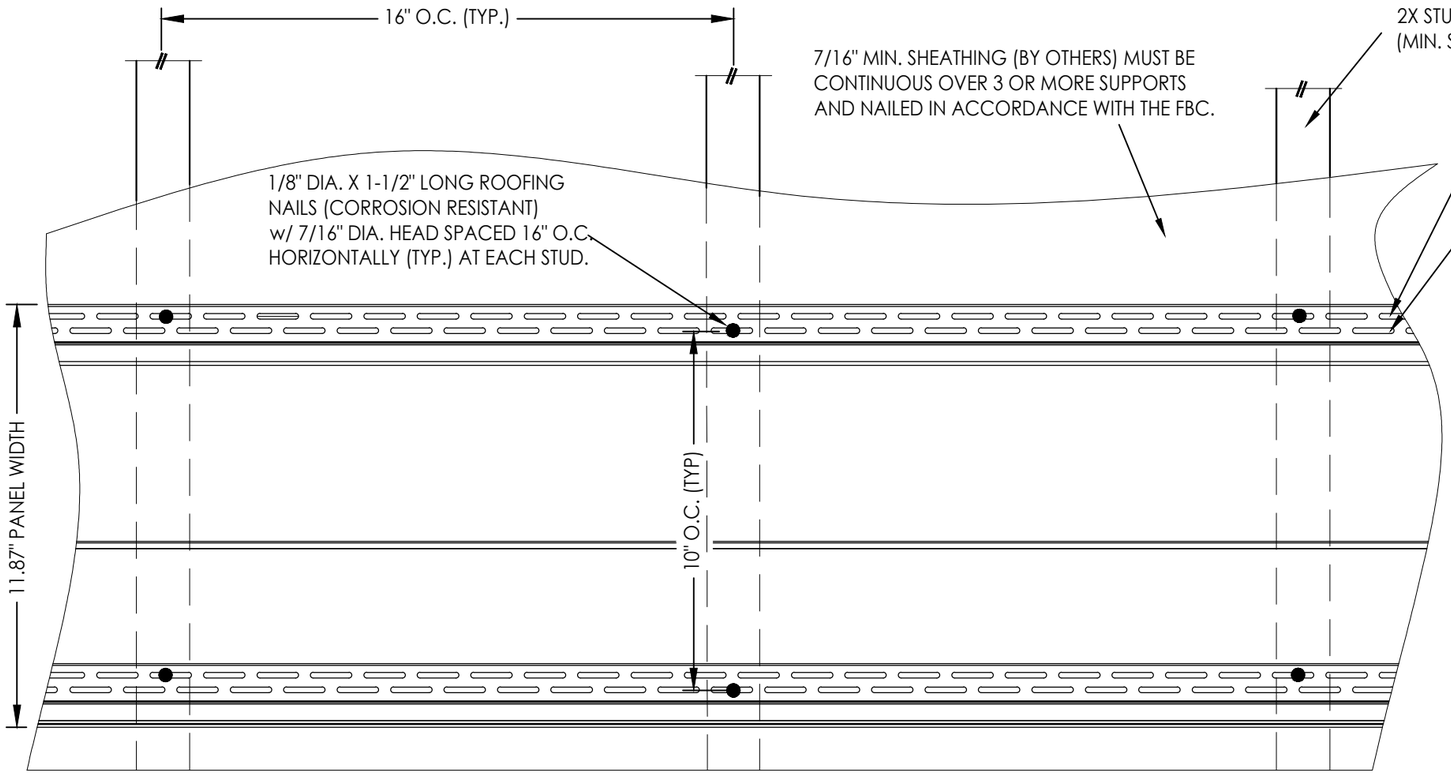

HORIZONTAL SIDING INSTALLATION

2x stud construction w/ sheathing
(Shown w/ alternating nailing pattern between top and bottom rows)

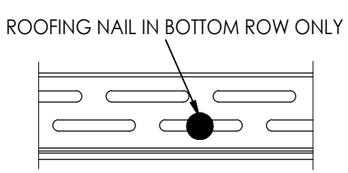

OPTIONAL NAILING INSTALLATION

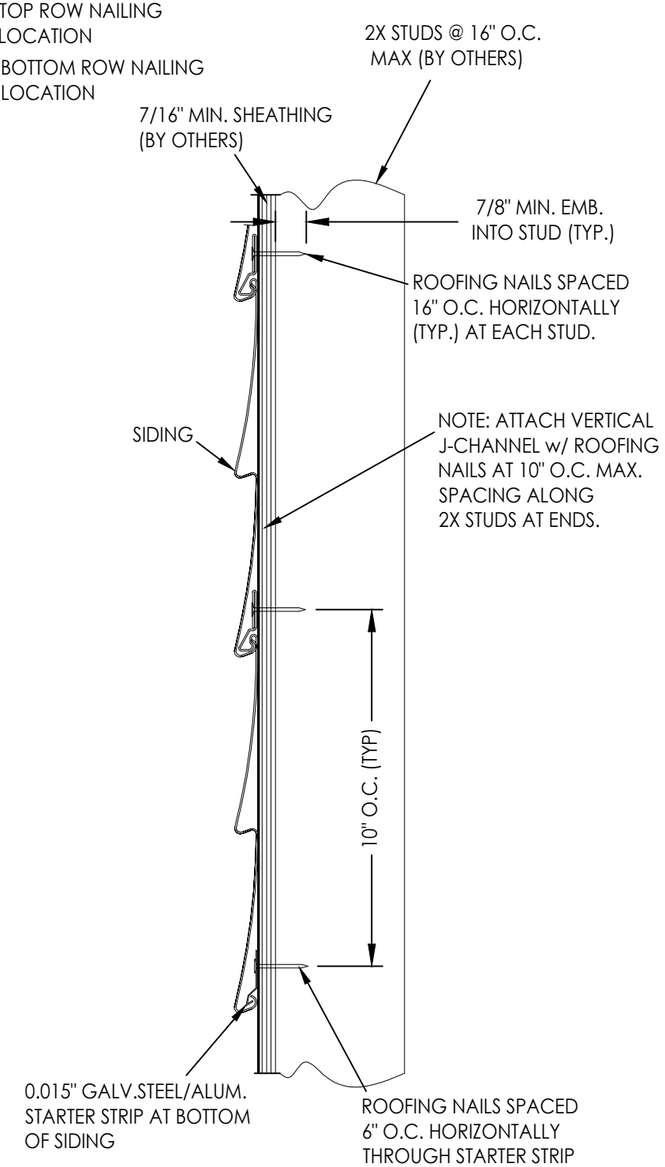

VERTICAL CROSS SECTION

2x stud construction w/ sheathing

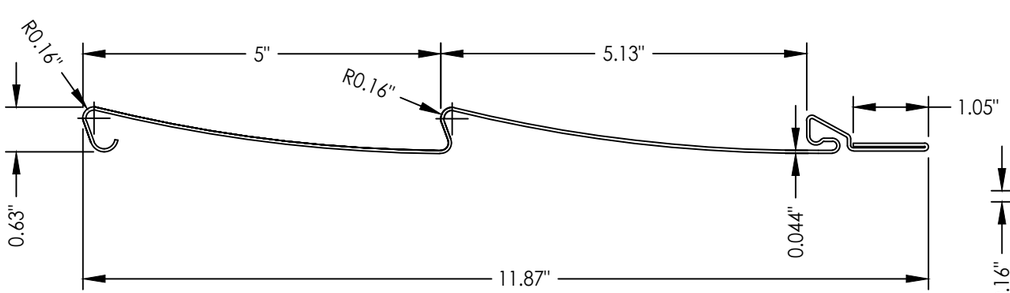

"ODYSSEY" D5 CLAPBOARD

w/ wide nail hem

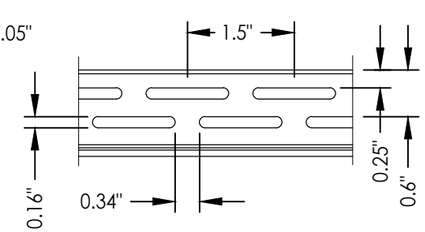

SIDING SLOT DETAILS

Documents Prepared By:
Lyndon F. Schmidt
P.E. No. 43409

RW BUILDING CONSULTANTS, INC.
P.O. Box 230, Valrico, FL 33595
Phone No.: 813.659.9197
FBPE Registry License No. 9813

PRODUCT: VINYL SIDING

PART OR ASSEMBLY: SIDING DETAILS (D5 CLAPBOARD)

NO.	DATE	REVISIONS	BY
4	10/9/23	UPDATE TO 8TH ED. (2023) FBC	LFS
3	9/22/20	UPDATE TO 7TH ED. (2020) FBC	LFS
2	10/03/17	UPDATE TO 6TH ED. (2017) FBC & REVISE DESIGN PRESSURES	LFS
1	2/12/15	UPDATE TO 5TH ED. (2014) FBC	LFS

DATE: 3/19/12
SCALE: N.T.S.
DWG. BY: JK
CHK. BY: LFS
DRAWING NO.: FL-15275.1
SHEET 5 OF 5

Z:\2023 FBC Drawings\Alside - Siding Division\FL-15275 R4\FL-15275.1-7.dwg